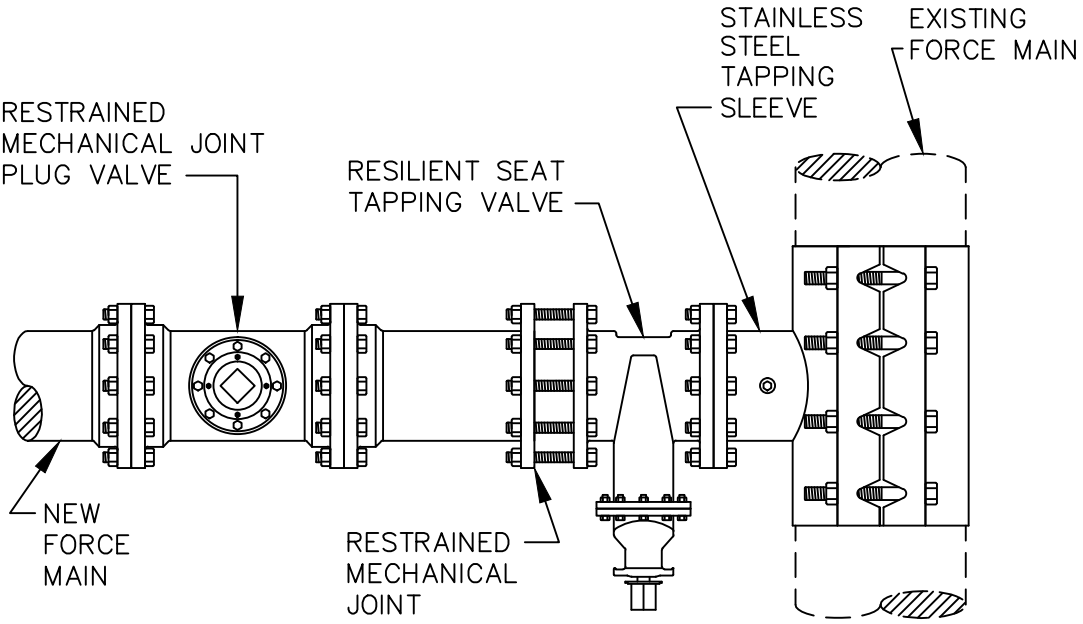

PLAN

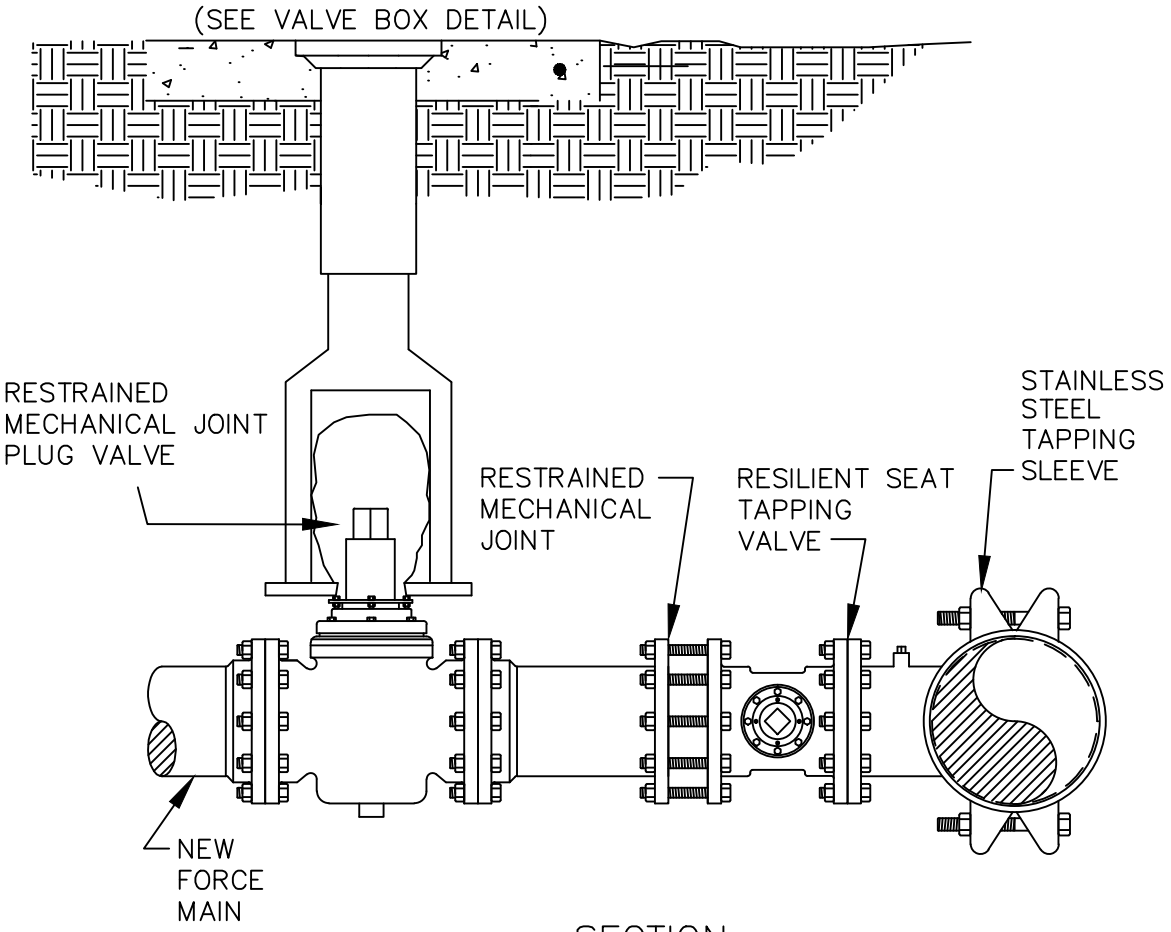

SECTION

STANDARD FORCE MAIN WET TAP

SEM. CO OCT 2012
321