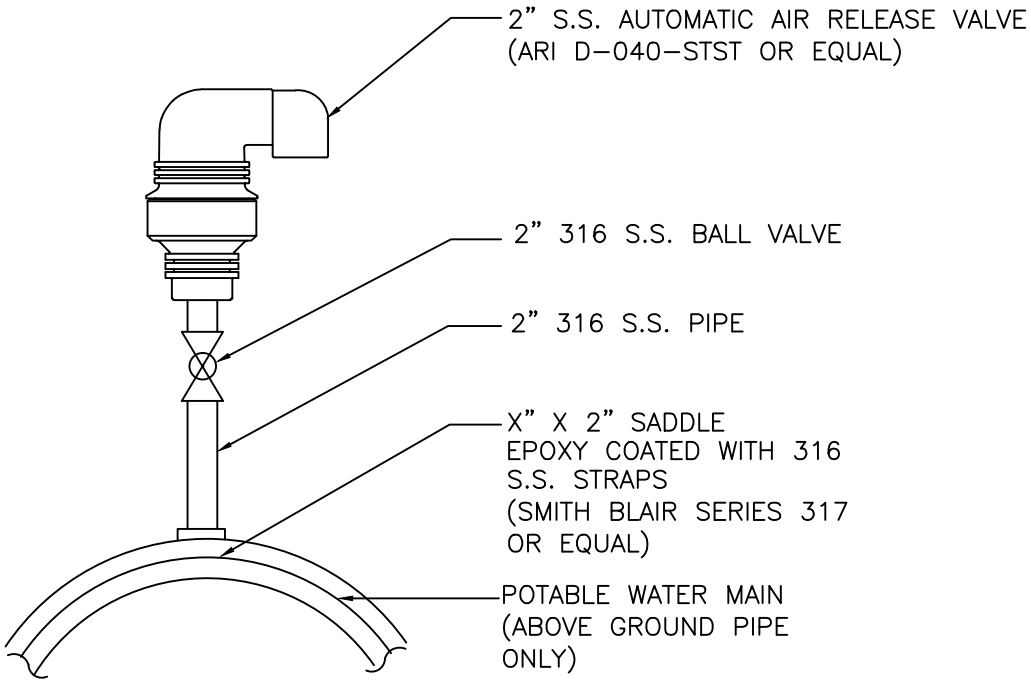

AERIAL POTABLE CROSSING
AIR RELEASE VALVE

SEM. CO. OCT 2012
204